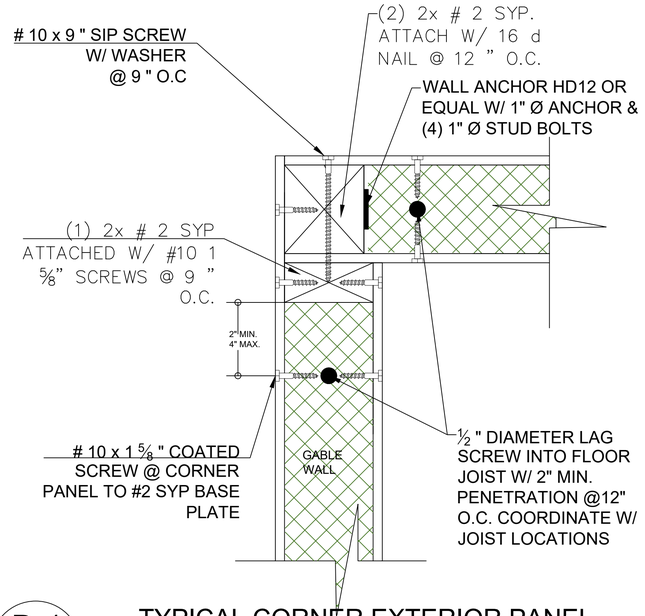

D-1 / SD-1

TYPICAL CORNER EXTERIOR PANEL JOINT
N.T.S

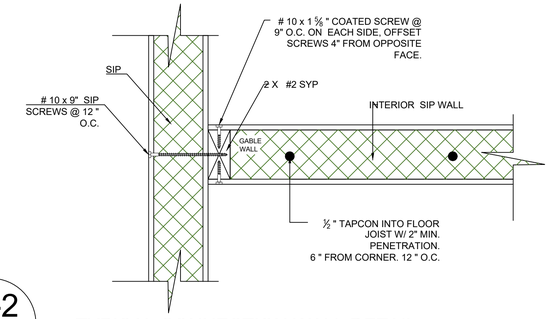

D-2 / SD-1

TYPICAL CONNECTION WALL DETAIL
N.T.S

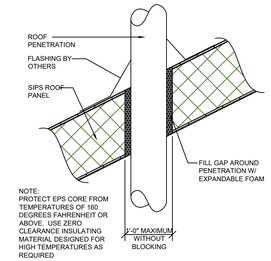

ROOF PENETRATIONS
N.T.S

D-3 / SD-1

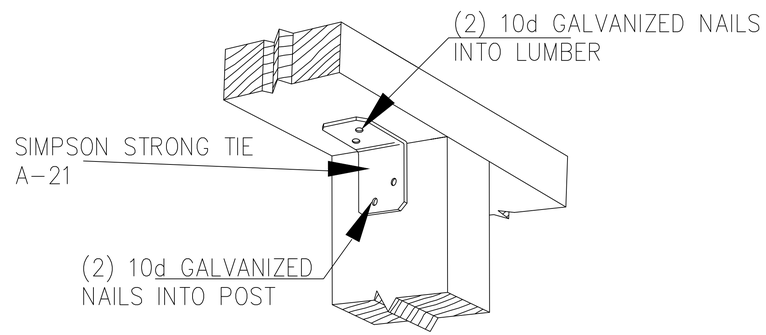

D-5 / SD-1

A-21 BRACKET
N.T.S.

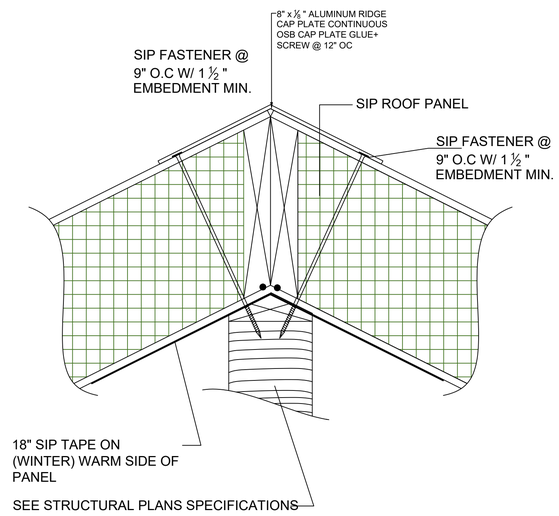

D-6 / SD-1

SIPS ROOF HIP (LUMBER CONNECTION)
SECTION B-B'

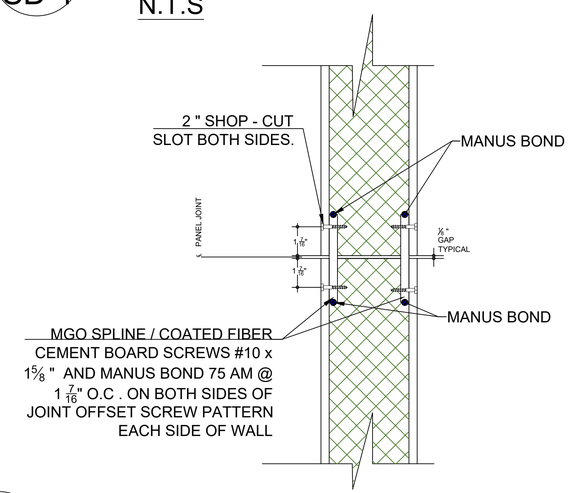

D-4 / SD-1

TYPICAL MGO SIPS' S WALL PANEL JOINT
N.T .S

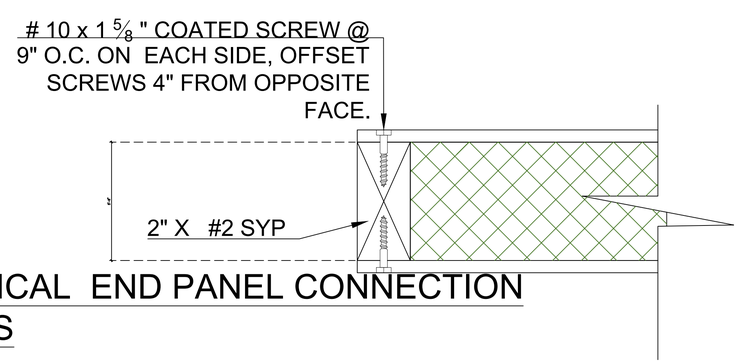

D-7 / SD-1

TYPICAL END PANEL CONNECTION
N.T.S

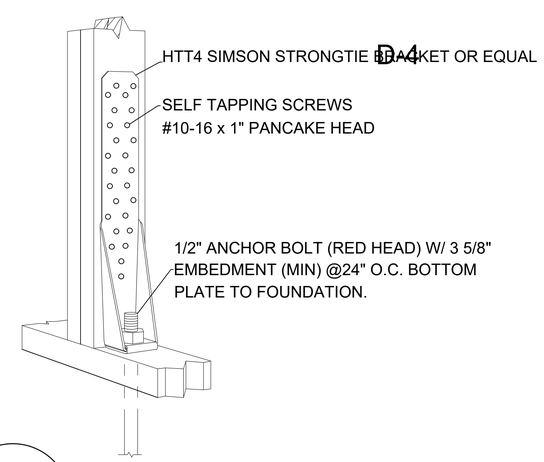

D-8 / SD-1

SIMPSON HTT4 BRACKET

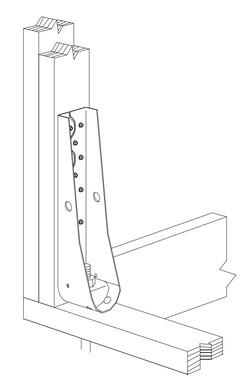

D-9 / SD-1

SIMPSON HDU5 BRACKET

SUPREME SIPS

SUPREME INSULATED PANEL SYSTEMS, LLC. THIS DOCUMENT, THE IDEAS AND DESIGN CONCEPTS INCORPORATED HEREIN, AS AN INSTRUMENT OF SERVICE, CAN NOT BE USED, IN WHOLE OR IN PART FOR ANY OTHER THAN THIS, WITHOUT THE WRITTEN AUTHORIZATION OF SUPREME INSULATED PANEL SYSTEMS, LLC.

SouthFlorida SIPs
SOUTH FLORIDA SIPS, LLC.
4124 160TH AVE. N
LOXAHATCHEE, FL. 33470
LICENSE # CGC1525861

DEMIDOVICH ENGINEERING, INC.
5200 GULF DRIVE SUITE 407
HOLMES BEACH, FL. 34217
LICENSE # CGC 1525861

OWNER

TITLE STRUCTURAL DETAILS

DATE 10.11.21

SHEET SD-1

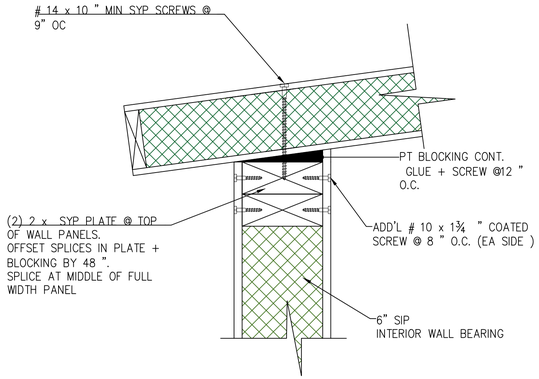

D-1 / SD-2

TYPICAL SIPS ROOF TO EXTERIOR SIPS WALL CONNECTION DETAIL
N.T.S.

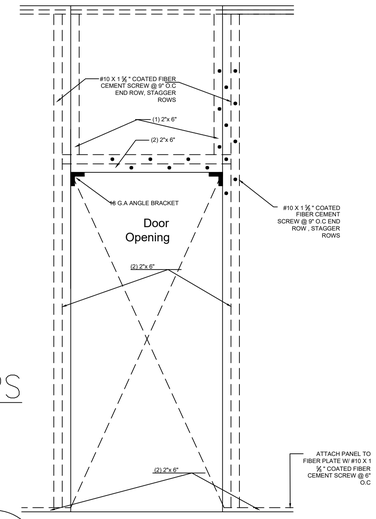

D-2 / SD-2

TYP DOOR CONNECTION
N.T.S

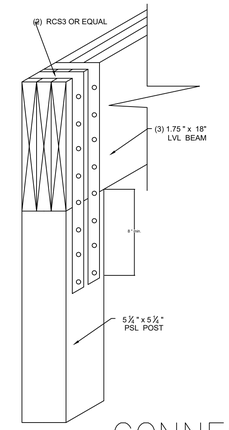

D-3 / SD-2

CONNECTION LVL RIDGE BEAM TO POST DETAIL
N.T.S

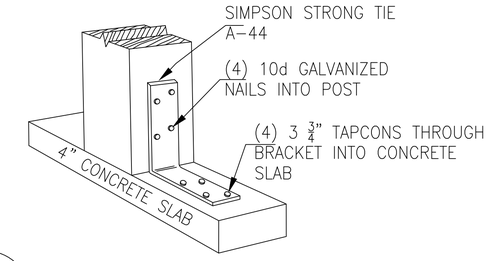

D-4 / SD-2

POST TO CONCRETE SLAB ON GRADE DETAIL
N.T.S.

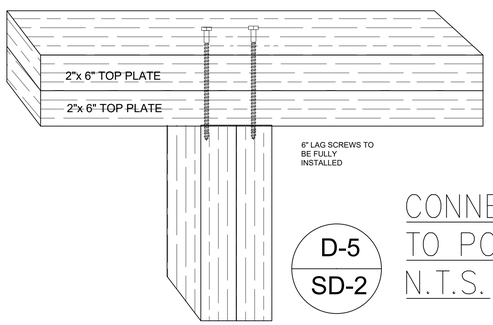

D-5 / SD-2

CONNECTION TOP-PLATE TO POST DETAIL
N.T.S.

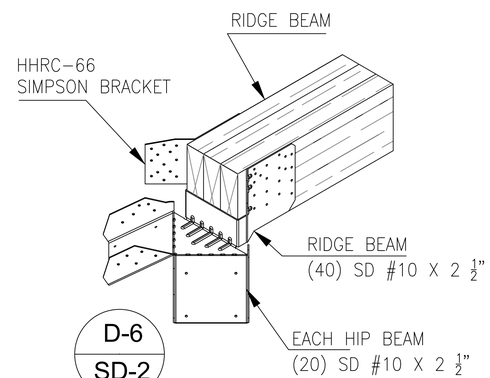

D-6 / SD-2

RIDGE BEAM CONNECTION
N.T.S.

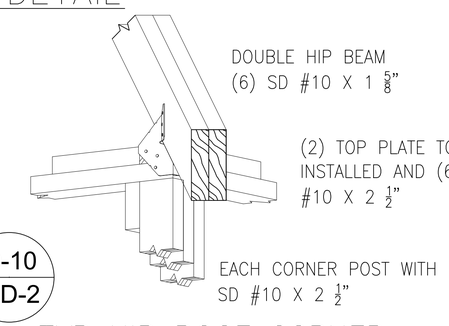

D-10 / SD-2

TYP HIP ROOF CORNER CONNECTION BETWEEN ROOF – SIP WALL DETAIL
N.T.S.

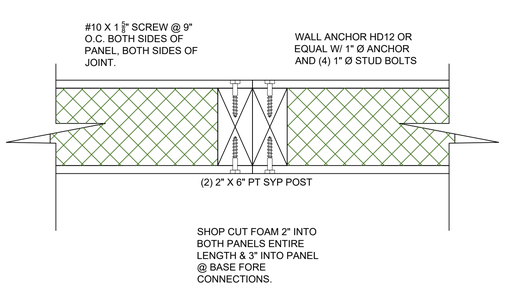

D-7 / SD-2

TYP CONNECTION BETWEEN POST – SIP WALL DETAIL
N.T.S.

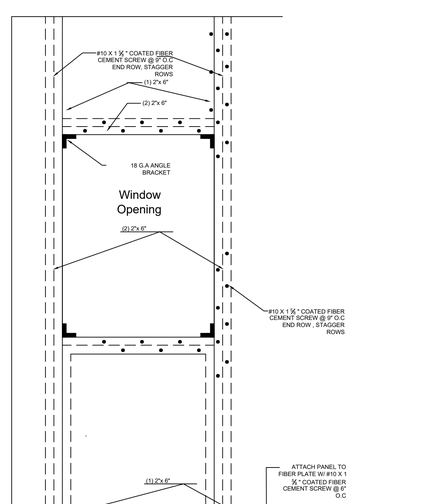

D-8 / SD-2

TYP WINDOWS CONNECTION
N.T.S

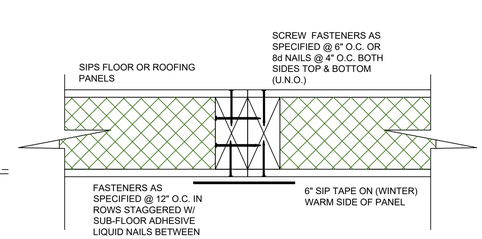

D-9 / SD-2

TYP CONNECTION BETWEEN POST – SIP WALL DETAIL
N.T.S.

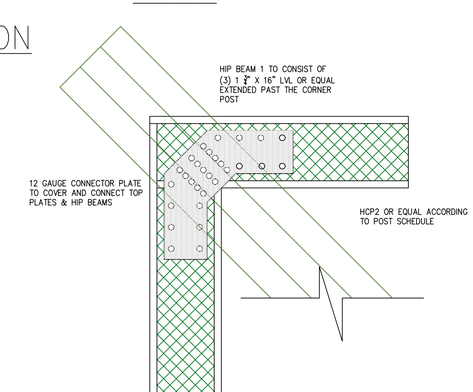

D-11 / SD-2

TYP HIP ROOF CORNER CONNECTION BETWEEN ROOF – SIP WALL DETAIL
N.T.S.

SUPREME SIPS

SUPREME INSULATED PANEL SYSTEMS, LLC. THIS DOCUMENT, THE IDEAS AND DESIGN CONCEPTS INCORPORATED HEREIN, AS AN INSTRUMENT OF SERVICE, CAN NOT BE USED, IN WHOLE OR IN PART FOR ANY OTHER THAN THIS, WITHOUT THE WRITTEN AUTHORIZATION OF SUPREME INSULATED PANEL SYSTEMS, LLC.

SouthFlorida SIPs
SOUTH FLORIDA SIPS, LLC.
4124 160TH AVE. N
LOXAHATCHEE, FL. 33470
LICENSE # CGC1525861

DEMIDOVICH ENGINEERING, INC.
5200 GULF DRIVE SUITE 407
HOLMES BEACH, FL. 34217
LICENSE # CGC 1525861

OWNER

TITLE STRUCTURAL DETAILS

DATE 10.11.21

SHEET SD-2